NATIVE TRAILS

SPECIFICATIONS

Tuscany Large Rectangle Mirror

CPM92

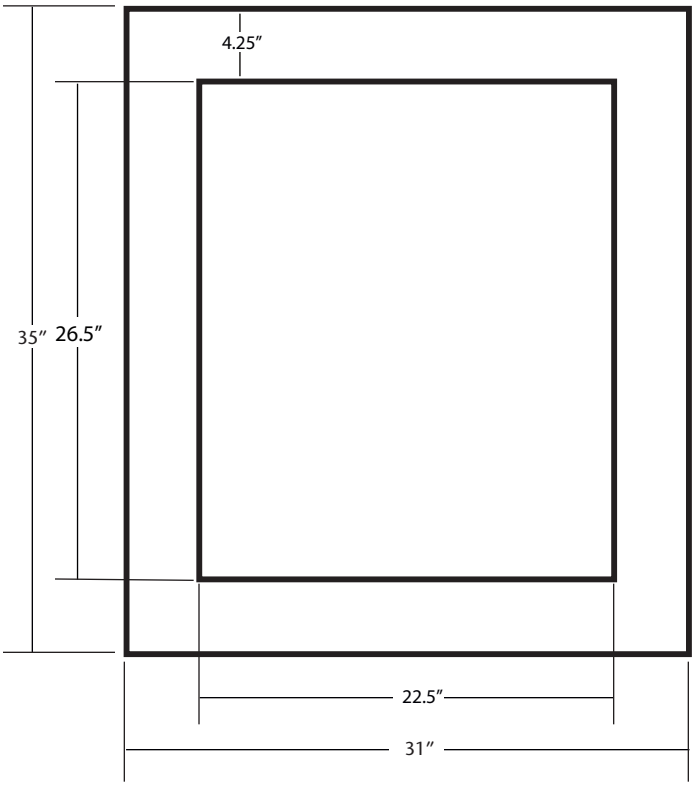

PRODUCT DETAILS
* 31″ x 35″ OD
* Hand hammered recycled copper
* Tempered finish
* Hand forged nails
* Dimensions are not exact and may vary ±½″

INSTALLATION
* Verticle or horizontal
* Tabs for hanging integrated into back of frame

IMPORTANT
Due to the handcrafted nature of this product, it will vary in finish, texture, hammering, and other details. Dimensions may vary up to 1/2″.